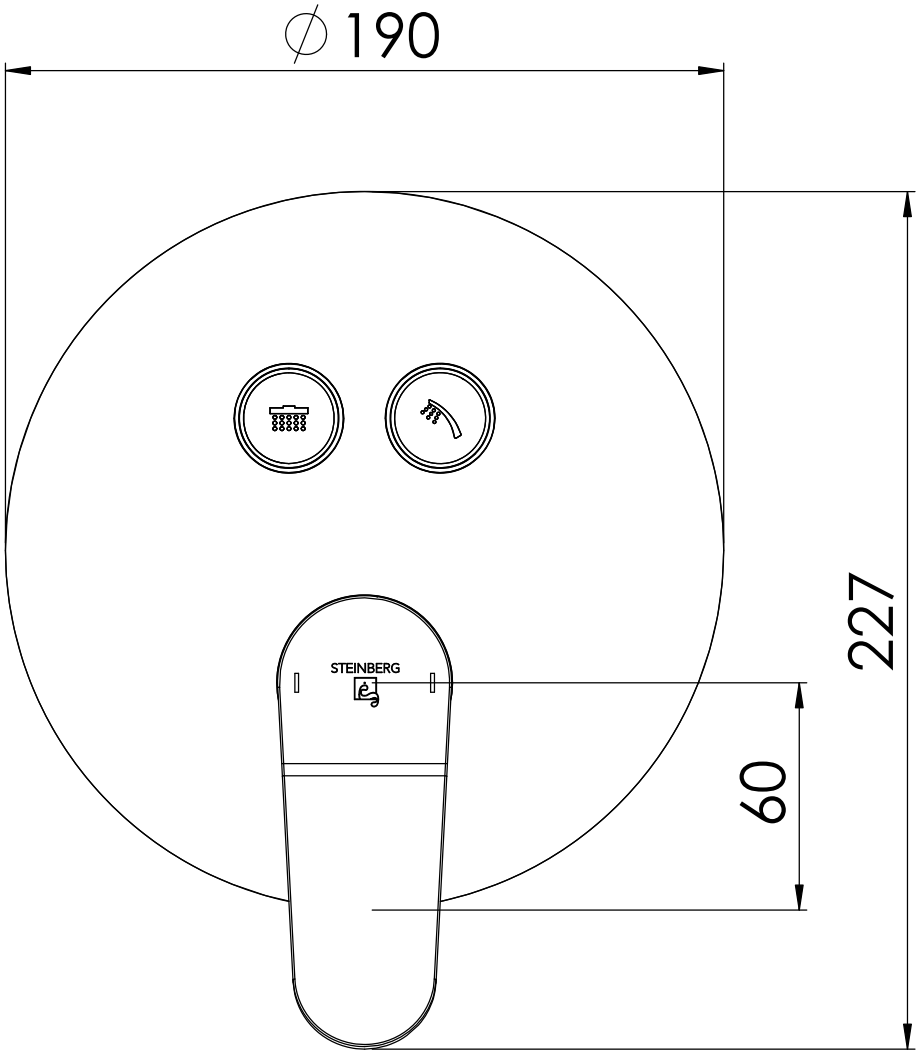

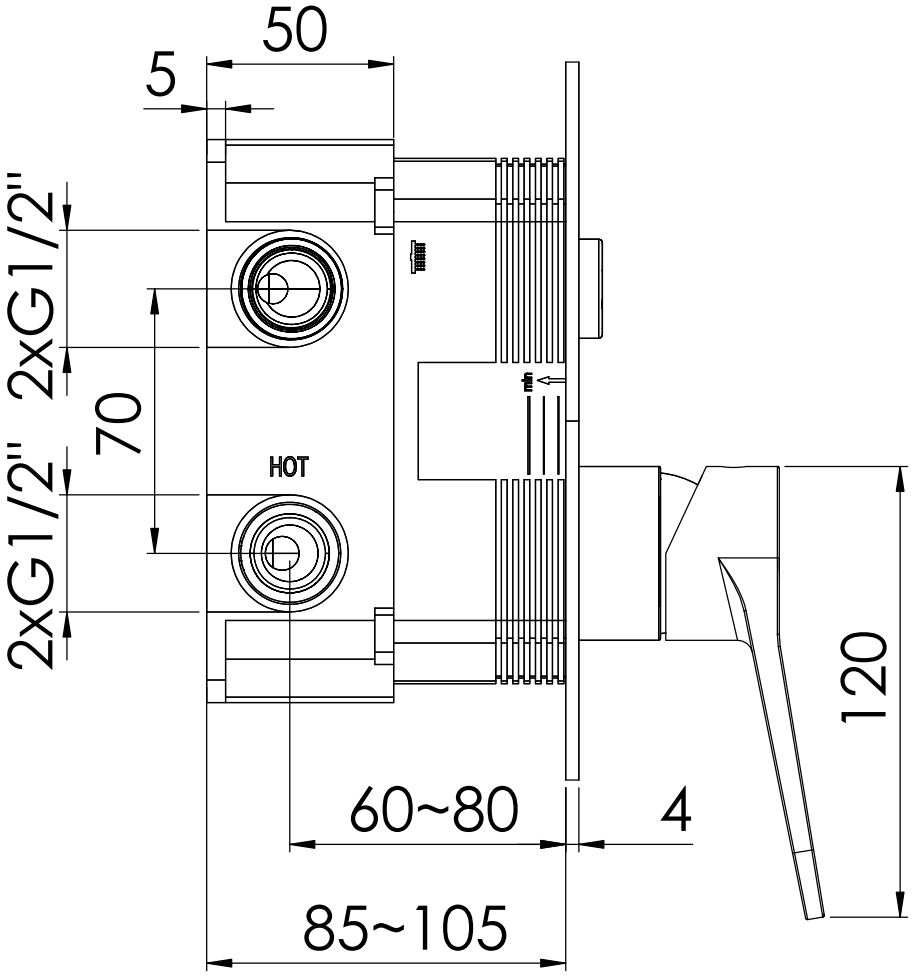

STEINBERG