DN 50/56

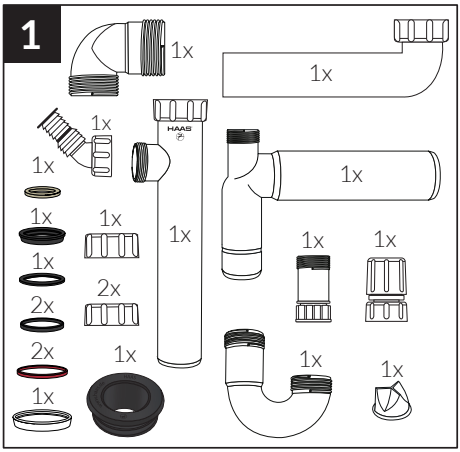

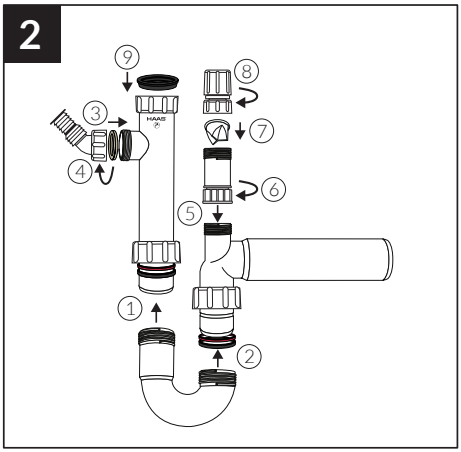

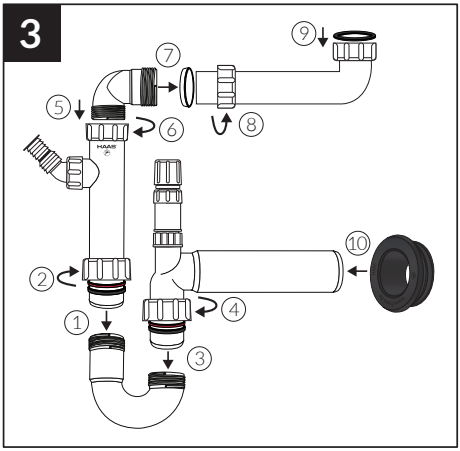

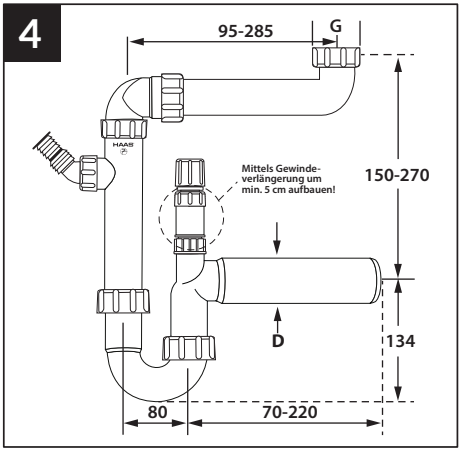

G = 1½"

2675.Montageanl