IDEALRAIN

Ideal Standard

BD647AA

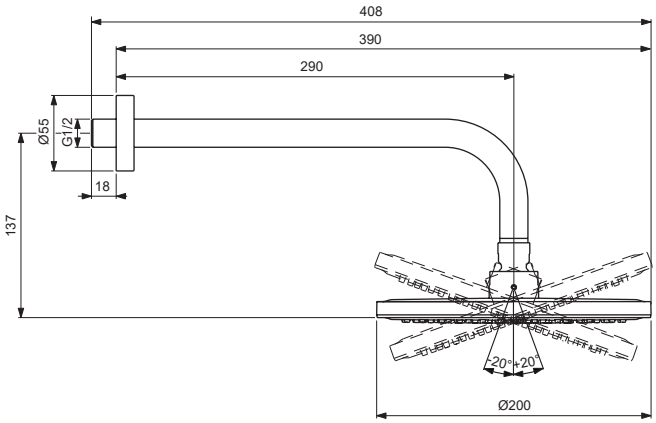

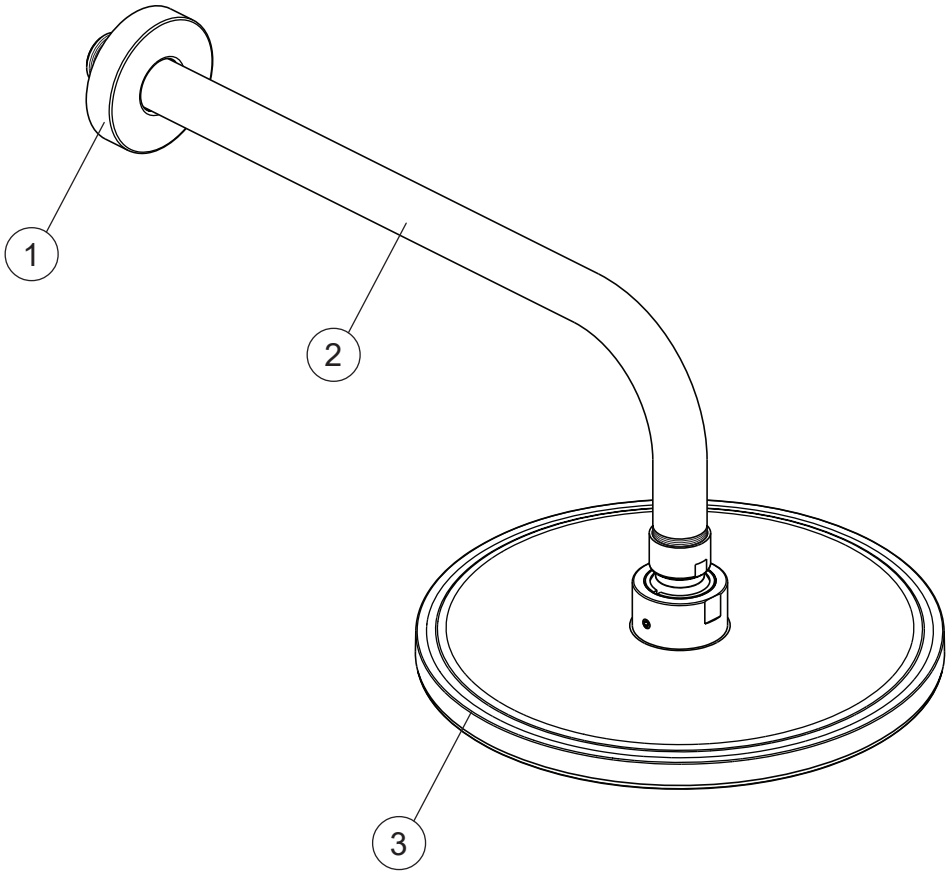

Pos.	Signify		Spare parts-Nr.	Quantity
1	Escutcheon	B961058AA	1 Set	
2	Wall arm 300mm	B9444AA	1 Pcs.	
3	Rain shower Ø200mm	BD140AA	1 Pcs.	